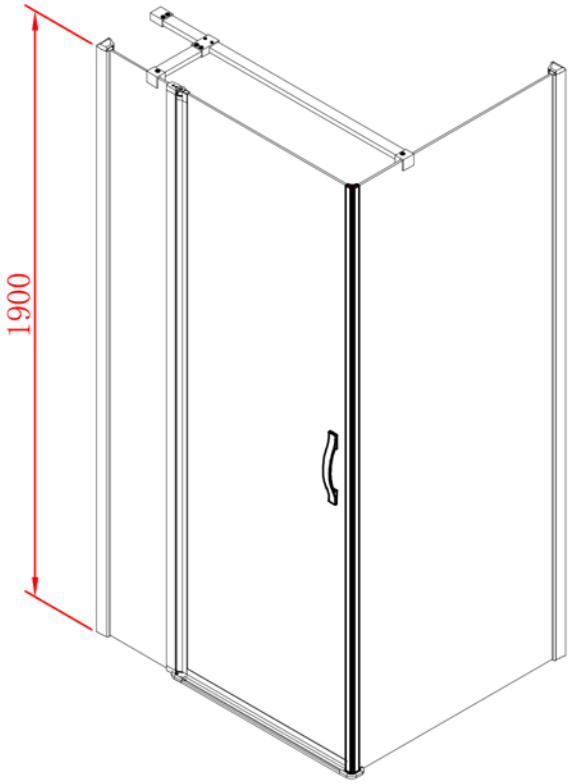
1900

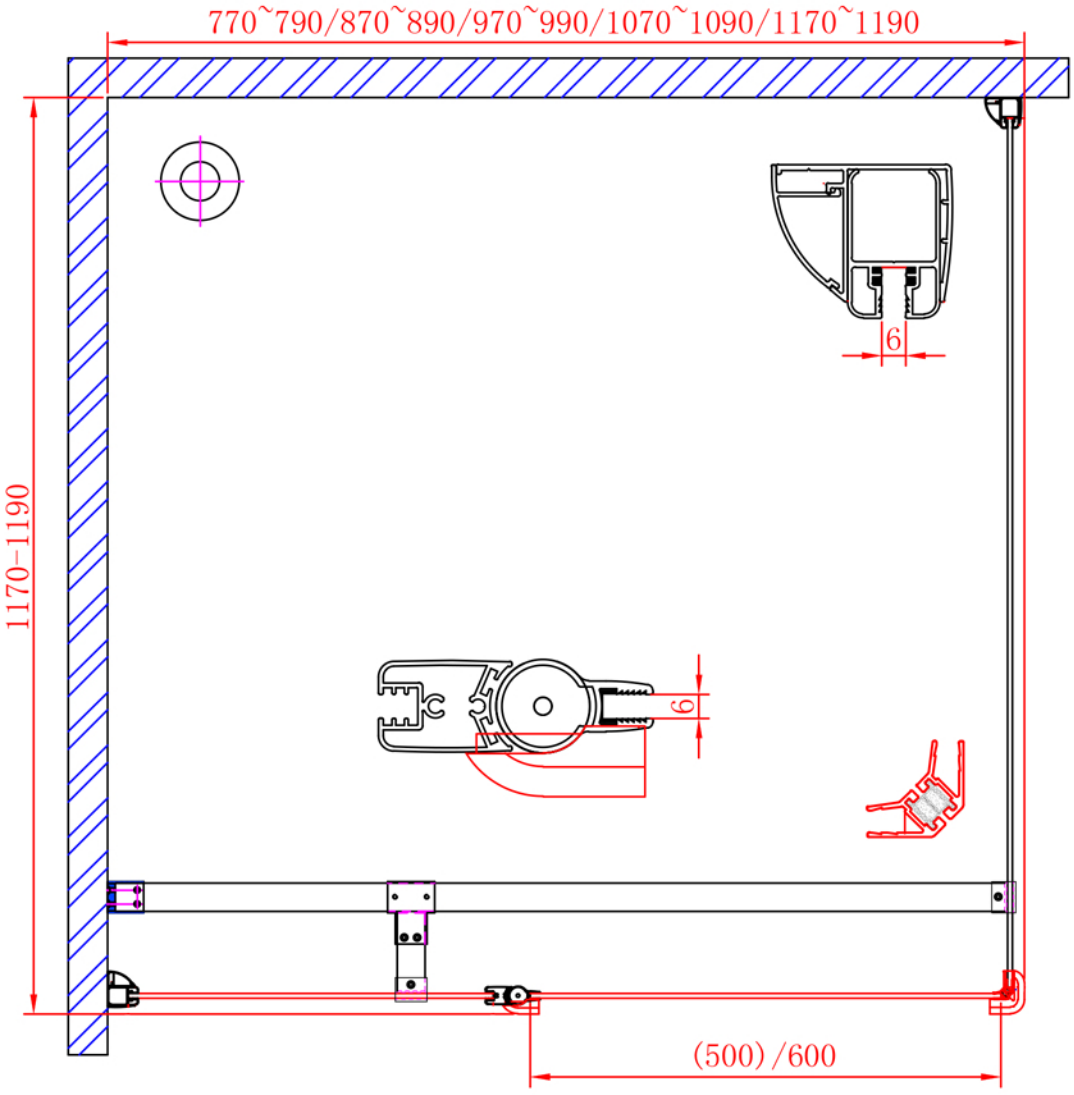
770~790/870~890/970~990/1070~1090/1170~1190
1170-1190
6
6
(500) /600

GO3512