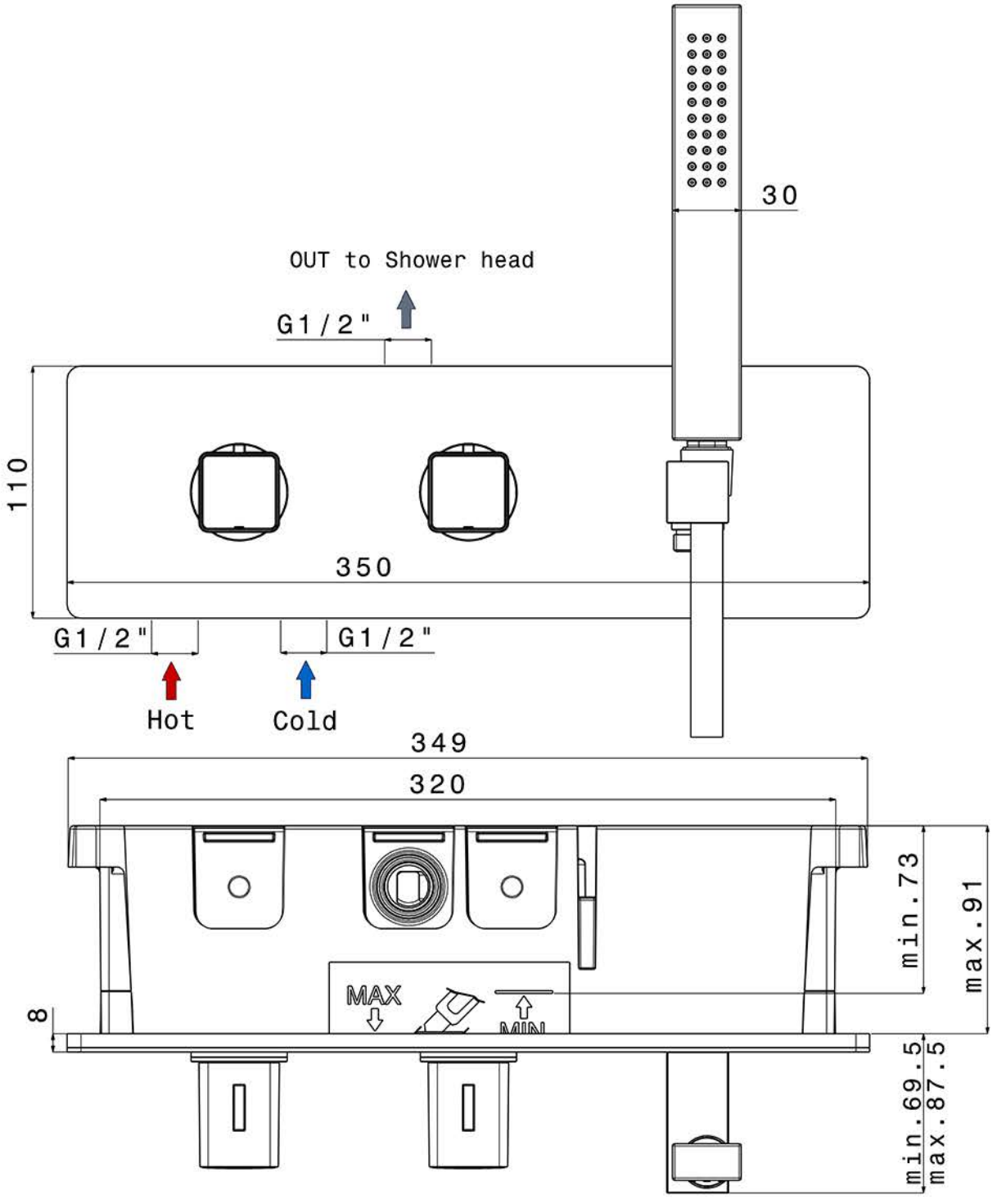

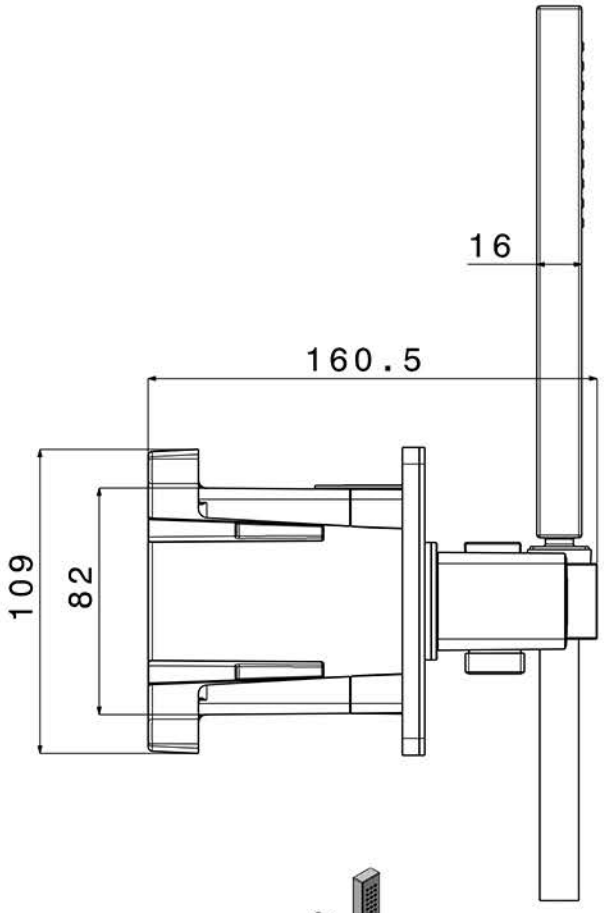

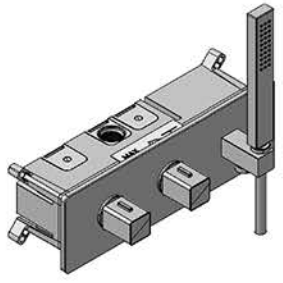

NA79L163DCR